AC 2007-244: A MANUFACTURING PROCESSES COURSE FOR MECHANICAL ENGINEERS

Rod Hoadley, California Polytechnic State University

Rod Hoadley has been teaching as a part time lecturer in the Manufacturing Engineering Department and the Industrial Technology Department at California Polytechnic State University, San Luis Obispo since 1996. He has a BS in Engineering Technology and an MA in Industrial Technology from California Polytechnic State University, San Luis Obispo. Rod has designed, developed, manufactured, and marketed numerous bicycle related products including a dial gauge wheel centering tool for building and maintaining spoked bicycle wheels; and a patent pending bicycle parking rack called "Peak Racks-Racks with Plaques".

Paul Rainey, California Polytechnic State University

Paul E. Rainey, former associate dean of engineering, is professor of Industrial and Manufacturing Engineering and Materials Engineering at California Polytechnic State University, San Luis Obispo. He earned a B.S.M.E. and B.S.Met.E., Purdue; an M.S., Metallurgy, M.I.T.; and a Ph.D., Industrial Education, Texas A&M. Since 1981, he has actively participated in the American Society for Engineering Education and was elected to the ASEE Board of Directors (1991-93 & 2000-2002) and was elected Fellow of ASEE in 2003.

© American Society for Engineering Education, 2007

Manufacturing Processes Course for Mechanical Engineers

Abstract

Engineers need to have a working, hands-on knowledge of manufacturing processes. At California Polytechnic State University, San Luis Obispo, with few exceptions, all engineering students take freshman-level manufacturing processes courses. Mechanical Engineering students generally take three lab-oriented courses dealing with machining, foundry, and welding processes. The machining processes course, which has ten three-hour labs, introduces typical machining equipment, such as lathes, mills, and drill presses. Both hand-operated and computer-controlled machines are used. Labs are limited to 20 students per section in a lab setting that contains 10 engine lathes, 5 manual/CNC vertical mills, 1 horizontal mill, 4 drill presses, 1 turret drill press, 1 CNC lathe, and 1 CNC bed mill. Starting with measurements, students are given lab exercises that illustrate the techniques needed to manufacture a machined part. Following measuring, there is a two-week introduction to the machines, which requires individuals to operate the lathes and teams of two to operate the mills. Next, the students are given a two-week project where they individually make a screwdriver using the available equipment. The final project consists of making an air motor in teams of five, where each team is responsible for producing one-half of the parts of the air motor. During the two projects the students develop and use routing and operation sheets for each machined part.

Introduction

California Polytechnic State University, San Luis Obispo (Cal Poly) has both a statewide and national reputation, and has consistently ranked in the top of the *U.S. News and World Report* listings as a university and in engineering programs. Cal Poly was founded in 1903 as a primarily residential campus in a small city located half way between Los Angeles and San Francisco on the Central Coast. In 2006, of the 18,722 students attending the university, 17,777 were undergraduates whose average credit load per quarter was 14.00. 4,706 students (26.5% of the student body) were enrolled in the 13 programs in Engineering and Computer Science. During the 2006 Fall Quarter, 1,241 new freshman and 145 new transfer engineering students enrolled in the university.

Since Cal Poly students must declare their major before admission, undergraduates in professional programs take some major-related courses at the freshman level that promote the campus philosophy of "learn by doing" and stresses hands-on lab activities. For example, Electrical Engineering students take one or two courses in electronics manufacturing, while Mechanical Engineering students take courses in machining, welding, and foundry. The early introduction to professional experience is geared to help new students gain some needed self confidence their first year, and thereby increase their odds of retention in their chosen major. Historically, these courses have not been used to satisfy any ABET criteria[1]. In addition, these manufacturing lab-oriented courses serve as essential training for many graduating engineering majors whose senior project obligation requires building a practical, operating device. To support the students in building their student club and senior projects, the Mechanical

Engineering Department operates a separate machining and welding facility which is open every day for extended hours and is directed by paid and volunteer supervisors.

Course Description

Although open to all majors, the material removal manufacturing processes service course is an introductory course in machining, mainly taken by Mechanical Engineering students as a freshman-level course. This course is not intended to train students to be machinists but rather introduce engineering students to manufacturing processes, since engineers having a general knowledge of how components are manufactured are highly desirable designers. Although others teach introductory manufacturing course to engineering students[2, 3], the approach used at Cal Poly is different in that students spend a large amount of time on individual manufacturing projects using a large variety of small industrial-size machines[4]. The course described in this paper is offered by the Industrial and Manufacturing Engineering (IME) Department for two units of credit, and consists of one lecture and one three-hour lab per week for the ten-week quarter.

The Catalog description of this course is:

> **IME 143 Manufacturing Processes: Material Removal (2)**
> Uses, capabilities, and theoretical and operational characteristics of lathe and milling machine tools, including conventional, automatic, and numerical control. Cutting tool characteristics, machining parameters, quality control, and production methods. Design considerations for manufacturing. Introduction to robotics and automation. Open to all majors. 1 lecture, 1 laboratory.

The present required lecture text is an abridged version of Groover's *Fundamentals of Modern Manufacturing*,[5] and the required lab manual[6] is published in-house and has been written and edited by the numerous faculty who have taught and currently teach this course.

At Cal Poly, departments are allowed to charge a lab fee for consumables used in projects that students take home. This lab fee is paid by the students as an additional fee and is a part of their registration. To charge these additional lab fees, the departments were required to provide written justification for each course lab fee and meet with an oversight committee. Since the original approval was given during a period of extreme budget reduction in the state, which has not improved for lab-based courses, departments are reluctant to seek approval for increasing the original fee amount. The need to increase the lab fee may be due to inflation and/or new student projects. For example in IME 143, the original student project was an air motor which will be described later. However, a new student screwdriver project, which will be described later, was introduced about ten years ago. To handle this additional expense, the department allows the student chapter of SME to collect an additional $10 fee for the screwdriver project. If a student does not want to pay this additional fee, the student can work on typical lathe exercises of turning and facing bar stock in lieu of the screwdriver project.

The course objectives are twofold: The first is to develop an elementary, hands-on skill in the basic hardware utilized in machining manufacturing processes; and the second is to convey an understanding of the continuum of processes that are required to produce a product after it is designed. The faculty in Mechanical Engineering desire students to enter the sophomore, junior, and senior level with a significant practical exposure to real machining manufacturing processes and representative hardware, since they are far better prepared to grasp the practicality of making a successful design.

The course begins with a hands-on measuring activity where students measure sheets of paper, a rectangular part, and a hexagonal part, so students not only become proficient using standard micrometers, vernier calipers, and dial gauges; they gain a good understanding of the magnitudes of tenths, hundredths, and thousandths of an inch. After the measuring activity, the students put their measuring skills to practice by carrying out a series of basic machining operations on a manual lathe and manual mill. For the lathe, these operations include deburring, facing, drilling and tapping, and turning. For the mill, these operations include using parallels for basic part set up, using a mechanical edge finder, milling flats and slots, and drilling. A typical lathe/milling exercise is shown in Figure 1. Each assignment requires the student to read and interpret an engineering drawing, manufacture a part according to print, inspect the part features, and fill out an inspection sheet. The inspection sheet requires comparing measured feature size to drawing specifications to identify out–of-tolerance features.

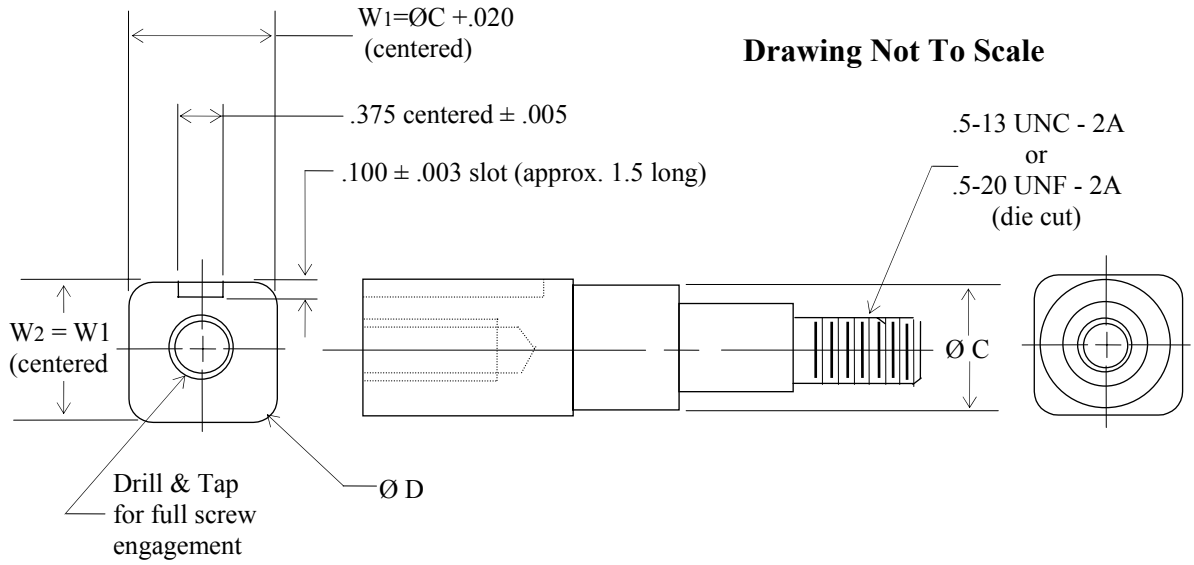

Figure 1: Typical Lathe/Milling Exercise

Equipped with basic machining experience, each student spends weeks four and five interpreting engineering drawings and routing sheets to manufacture a screwdriver (Figure 2). Based on their experience, students must choose between the various manufacturing processes and machines to complete the individual project. The screwdriver project allows each student to apply manufacturing theory and practice to choose the most efficient manufacturing methods.

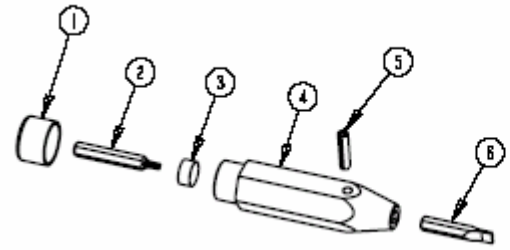

ITEM	DESCRIPTION	QNTY
1	VINYL CAP	1
2	PHILLIPS BIT STORED IN BODY	1
3	.50 Ø MAGNET	1
4	SCREWDRIVER BODY	1
5	.2 Ø ROLL PIN	1
6	FLAT BLADE SCREWDRIVER BIT	1

Figure 2: Screwdriver Assembly

The final four weeks of the quarter consist of more in-depth, hands-on manufacturing application with team manufacturing of air motors (Figure 3). Due to the high cost of setting up and maintaining a manufacturing facility, Ssemakula and Liao[3] have used a different type of motor project for the students to get hands-on machining experience.

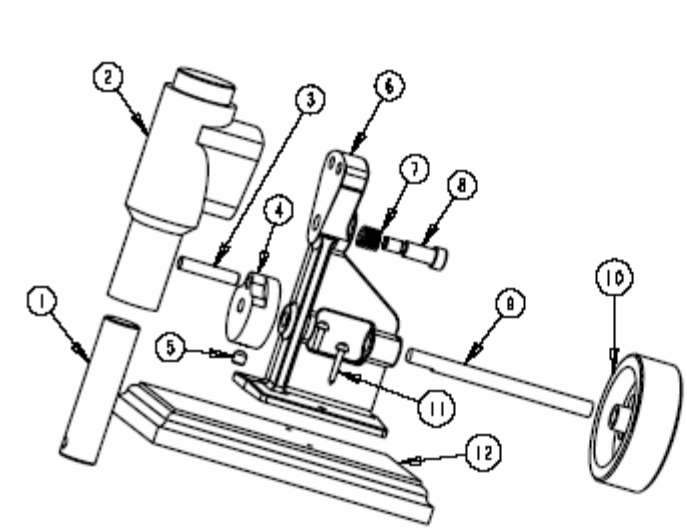

ITEM	DESCRIPTION	QNTY
1	DELRIN PISTON	1
2	ALUMINUM CYLINDER	1
3	PISTON DOWEL PIN	1
4	BRASS CRANK DISK	1
5	10-32 SET SCREW	1
6	ALUMINUM FRAME	1
7	STEEL SPRING	1
8	1/4-20 SHOULDER BOLT	1
9	STEEL MAIN SHAFT	1
10	ZINC DIE CAST FLYWHEEL	1
11	#6 BUTTON HEAD WOOD SCREW	2
12	WOOD BASE	1

Figure 3: Air Motor Exploded Assembly Drawing

With the team approach to manufacturing, the course has been modified to include other basic learning experiences, such as working in an engineering team, utilizing in-process gauging, experiencing prototype vs. production manufacturing, designing a production line, and applying a pull type manufacturing system for quality control. The air motor project has been designed to give students a "real world" manufacturing experience. It is a team-based project that occupies about 40% of the quarter. The class is divided into four teams, each with five members. Each team manufactures three of the six major parts. Two of the teams manufacture a cylinder, a main shaft, and a flywheel, while the other two teams manufacture a frame, a crank disk, and a piston.

The project begins with an air motor dissection to learn how all parts fit together. Then a discussion occurs on the various methods available to machine the different features of each part,

given the various types and number of machines available in the lab. Each team completes a pre-production (prototype) run for each assigned part to gather all manufacturing data, such as set-up, speeds, feeds, tooling, and machining times. During pre-production, optimal, idealized Routing-Time and Operation Sheets are generated for each part as it is intended to be manufactured. Lastly, each team carries out production runs of ten pieces for each of its three specific parts. At the end of the production run, all parts are cleaned, deburred, inspected, and inventoried with a Vendor Part Inspection Log Sheet which allows the students to record for each feature the ten measured values for each dimension. Upon completion of the inspection sheets, each team exchanges parts with another team to obtain the needed parts to assemble and test five complete air motors. At the end of the quarter, each student will be able to keep an air motor which often ends up being used by alumni as a desk trophy.

A typical quarter would proceed as follows:

<u>Week 1</u>

Lecture: Introduction
Metrology and measuring tools

Lab: Lab introductions, guidelines, and orientation
Safety discussion and assign safety quiz
Measuring exercise
Overview of lathes and mills with demo and dry run
Explanation of cleanup procedure

<u>Week 2</u>

Lecture: Lathe and mills and machining variables

Lab: Safety quiz due
Review of lathes and mills and practice machining air
Group A – lathes: cylinder exercise facing and turning
Group B – mills: mill block exercise

<u>Week 3</u>

Lecture: Overview of machining technology
Machining operations and sheets
Routing sheets
Inspection and time sheets
Lathe – cross and compound slides

Lab: Group A – mills: mill block exercise
Group B – lathes: cylinder exercise facing and turning

<u>Week 4</u>

Lecture: Cutting tool technology – geometry, materials, fluids, and tool life

Lab: Demonstrate turning tapers on lathes
Individual screwdriver project from 7/8” aluminum hex stock
Group A – lathes: facing and tapering
(optional – turning and drilling)
Group B – mills: facing, end milling cap end, drilling

Week 5
Lecture: Mid-term Exam
Lab: Individual screwdriver project from 7/8" aluminum hex stock
Group A – mills: facing, end milling cap end, drilling
Group B – lathes: tapering
(optional – turning and drilling)
All – cross drill, broach, inspect, and assemble

Week 6
Lecture: Milling and drilling processes and tooling
Broaching
Sawing
Lab: Introduction to air motor project
Assign teams and air motor dissection activity
Demonstrate machining of six major parts
Discuss Routing and Operation Sheets
Assign air motor project parts (3 per team)

Week 7
Lecture: Abrasives
Grinding
Nontraditional machining
Lab: Pre-production prototype
Finalize parts and Routing and Operation Sheets for production

Week 8
Lecture: Introduction to CNC machining and programming
Lab: Air motor project – Production run part #1 and part #2 (10 each)

Week 9
Lecture: Economics of machining
Lab: Air motor project – Production run part #2 and part #3 (10 each)

Week 10
Lecture: Final Exam
Lab: Finish production, deburr
Complete Vendor Part Inspection Log Sheet per part
Finalize paperwork
Air motor assembly
General lab room cleanup

Course grades for IME 143 are issued by the lab instructor and are calculated as follows: 50% lecture (10% homework and quizzes, 40% mid-term exam, and 50% final exam) and 50% lab (15% quizzes, exercises, homework, and participation, 35% screwdriver project, and 50% air

motor project). However, each missed lab is negative 20% of the maximum lab score or one (1) course letter grade. A passing grade must be obtained in both lecture and lab to pass the course.

Course Facilities and Equipment

The machining facilities are used almost exclusively for only two courses: IME 143 and IME 144 – Introduction to Design and Manufacturing (two hours lecture and two 3-hour labs). While IME 143 is a service course, IME 144 is primarily for Industrial, Manufacturing, and Aeronautical Engineering majors.

The course is taught in a new facility that consists of a large briefing room and a machining lab. The 36' x 24' (865 square feet) briefing room is connected to the 35' x 60' (2100 square feet) machining lab through a double door which allows continuity between class room and lab facilities.

The briefing room is equipped with tables and chairs for 30 students (although only 20 are officially enrolled in each lab period), and has spacious white boards, an overhead projector, a TV with VCR and DVD players, and a computer projection system.

The machining lab is equipped with the following machinery and equipment:

Ten 1957 Leblond 13-inch swing engine lathes
Five Kent manual/CNC vertical knee mills with three axis Acu-Rite controllers
One Milwaukee Model H horizontal mill with Kearney Trecker power feed unit
Four Jet floor mount ¾ HP ½ inch capacity drill presses
One Burgmaster 1.5 HP six station turret drill press with an automatic tapping head
One Haas HL-2 CNC lathe
One Haas Mini Mill CNC bed mill
One Royal Master Centerless Grinder
Three Drake Manual Arbor Presses
One 12-inch throw Pioneer Broach
One 2-speed 12-inch Brown Master Cold Saw
One 1.5 HP 2-inch Burr King Belt Sander
One 18 x 18 inch Collins Micro Flat surface plate
85 lockers
One 2¼ x 6 foot material storage bin
Four 36 x 60 inch work/assembly tables with Wilton vises
Four 5 x 5 foot Stanley Vidmar tool storage cabinets
One 3 x 6 foot storage cabinet for parts in process

Conclusion

The IME 143—Manufacturing Processes: Material Removal course well serves the Mechanical Engineering students at Cal Poly by giving them structured machining activities where they must produce parts individually and in teams to meet prescribed dimensions and tolerances. These

activities help provide the students with the skills that they will need to produce working models of their senior projects and with an understanding of the level of difficulty and expense to machine parts. Probably the most important result is students' pride of accomplishment in performing genuine engineering tasks early in their education. It is highly motivational and encourages them to pursue a career in engineering. From the viewpoint of the instructors, frankly, the course is fun to teach. The students are inspiring and enthusiastic. Other instructors benefit, as well, for after this course is completed, students enter other engineering courses with some awareness of the larger processes involved in engineering. They bring along practical skills, and they have developed a respect for the fund of smaller contributions required in manufacturing a product.

References

[1] Cheda, A., Brown, K., Rainey, P.E. (1994). "CAD-FAB: Integrated DAC/CAM & Manufacturing in a Freshman Course; A Summary of the Evolution of Integration of Design and Manufacturing at Cal Poly," *Proc. ASEE*, pp. 1346-1348.

[2] Rhodes, C. (2005). "Introduction of Manufacturing to Mechanical Engineering Freshmen", *Looking Forward: Innovations in Manufacturing Engineering Education,* CIMEC *(*CIRP International Manufacturing Ed. Conf.) and 3rd SME International Conf. on Manufacturing Ed., pp. 9-12.

[3] Ssemakula, M.E., and Liao, G.Y. (2005). "A Hands-on Approach to Teaching Product Development", *Looking Forward: Innovations in Manufacturing Engineering Education,* CIMEC *(*CIRP International Manufacturing Ed. Conf.) and 3rd SME International Conf. on Manufacturing Ed., pp. 189-195.

[4] Rainey, P.E., Cheda, A., and Cooper, M. (1995). "An Introductory Electronic Manufacturing Course for Engineering Majors", *Proc. ASEE*, pp. 302-310.

[5] Groover, M.P. (2007). *Fundamentals of Modern Manufacturing: Materials, Processes, and Systems,* 3rd ed.,abridged, Wiley, New York.

[6] *IME 143 Manufacturing Processes: Material Removal, Lab Manual* (2007 Winter Quarter), Cal Poly State Univ. El Corral Book Store, San Luis Obispo, CA: